— PROPRIETARY —
THIS DOCUMENT CONTAINS CONFIDENTIAL, PROPRIETARY INFORMATION THAT IS FOX PROPERTY. DO NOT DISCLOSE TO OR DUPLICATE FOR OTHERS EXCEPT AS AUTHORIZED BY FOX.

REVISIONS				
ZONE	REV	DESCRIPTION	DATE	APPROVED
	A	RELEASE TO PRODUCTION	15MAR06	ART

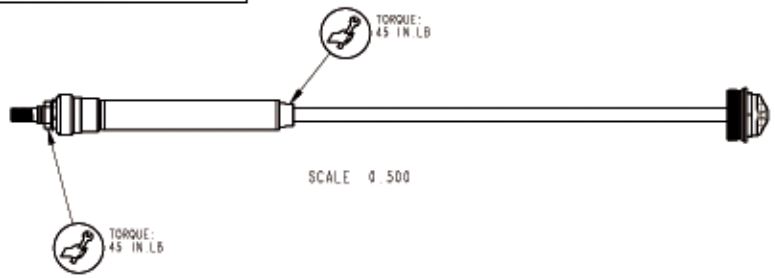

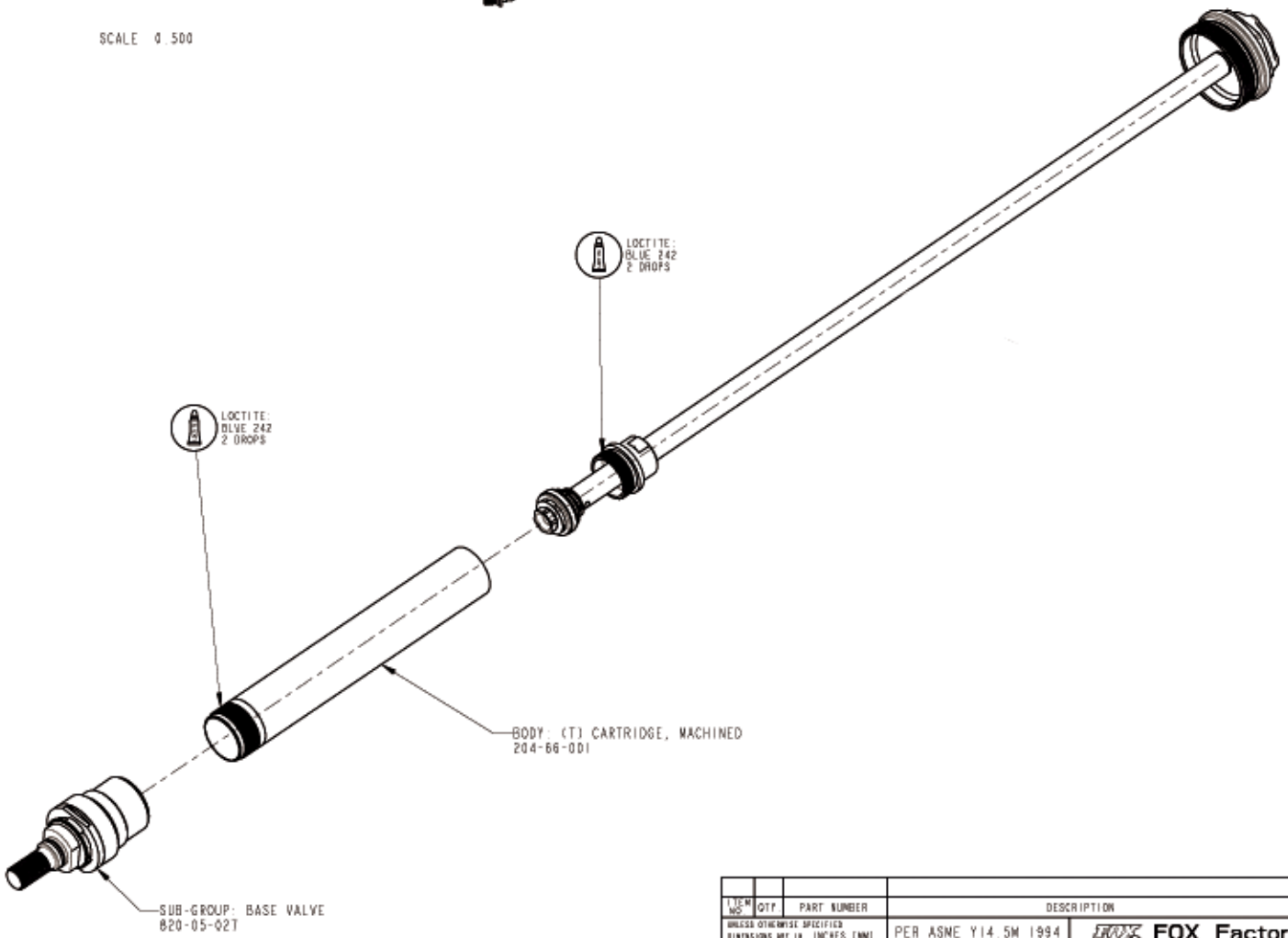

ITEM NO.	QTY.	PART NUMBER	DESCRIPTION	MATERIAL SPEC

UNLESS OTHERWISE SPECIFIED DIMENSIONS ARE IN INCHES [MM]

TOLERANCES ARE:
DECIMALS: .XX [.03] ± .01 [0.25]; .XXX [.XX] ± .005 [0.13]
ANGLES: ± 1°

THIRD ANGLE PROJECTION

PER ASME Y14.5M 1994

APPROVALS		DATE
DRN. BY	A. GARIBAY	30JUL05
CHK. BY	D. DECKER	03MAR06
ENG.	A. TRUJILLO	30JUL05
MFG.	D. REICH	03MAR06
QUA.		

FOX Factory, Inc.
134 Harger Way, Watsonville, CA 95076 USA, Ph 831-768-1100, Fax 831-768-6312

CARTRIDGE ASSEMBLY: 07 32
80 R, 8 MM

SIZE: C
PART NO. 820-04-084

PLOT SCALE 1:1
SHEET 1 OF 2