REVISIONS				
ZONE	REV	DESCRIPTION	DATE	APPROVED
	A	RELEASE FOR PRODUCTION	07MAR06	
	B	ADDED -112 O-RING AND NOTE #4.	03AUG06	

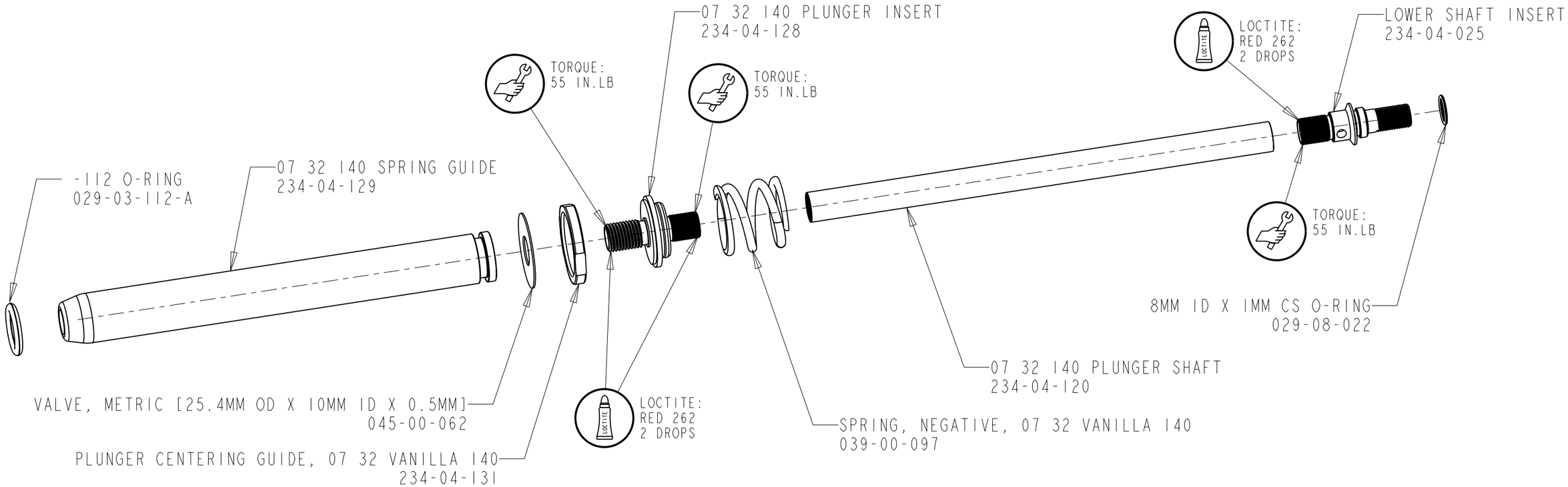

ASSEMBLY INSTRUCTIONS:

1. SNAP THE "NEGATIVE SPRING" ON THE "PLUNGER INSERT".

2. APPLY 2 DROPS OF RED LOC-TITE 262 ON TO BOTH THREADS OF THE "PLUNGER INSERT". INSTALL "CENTERING GUIDE" AND "SHIM" ON TO THE TOP OF "PLUNGER INSERT". THREAD THE "SPRING GUIDE" AND "PLUNGER SHAFT" ON TO THE "PLUNGER INSERT".

3. APPLY 2 DROPS OF RED LOC-TITE 262 TO THE "LOWER SHAFT INSERT" AND THREAD ON TO "PLUNGER SHAFT". INSTALL "SPRING GUIDE" SIDE OF ASSEMBLY INTO COLLET. INSTALL A CROSS-PIN TOOL IN THE "LOWER INSERT" AND TORQUE ASSEMBLY TO 55 IN-LB. WIPE AWAY EXCESS LOC-TITE.

4. INSTALL THE -112 O-RING ONTO THE "CENTERING GUIDE" UNTIL IT SNAPS INTO THE GROOVE.

5. USING A BULLET TOOL AND GREASE, INSTALL "8MM ID X 1MM CS O-RING" ONTO GROOVE OF "LOWER INSERT".

ITEM NO.	QTY.	PART NUMBER	DESCRIPTION	MATERIAL SPEC

UNLESS OTHERWISE SPECIFIED
DIMENSIONS ARE IN: INCHES [MM]

TOLERANCES ARE:
DECIMALS
.XX [.X] ± .01 [0,25]
.XXX [.XX] ± .005 [0,13]
ANGLES ± 1°

THIRD ANGLE PROJECTION

DO NOT SCALE DRAWING

PER ASME Y14.5M 1994

APPROVALS		DATE
DWN. BY	B. BECKER	18JAN06
CHK. BY	B. BECKER	18JAN06
ENG.	B. BECKER	18JAN06
MFG.		
ADD.		

FOX Factory, Inc.
130 Hangar Way, Watsonville, CA 95076 USA, Ph 831-768-1100, Fax 831-768-9312

SPRING SUB-GROUP:
07 32 140 PLUNGER SHAFT ASSY.

SIZE B | PART NO. 820-02-029

PLOT SCALE 1:1 | SHEET 1 OF 1